DIMA 562

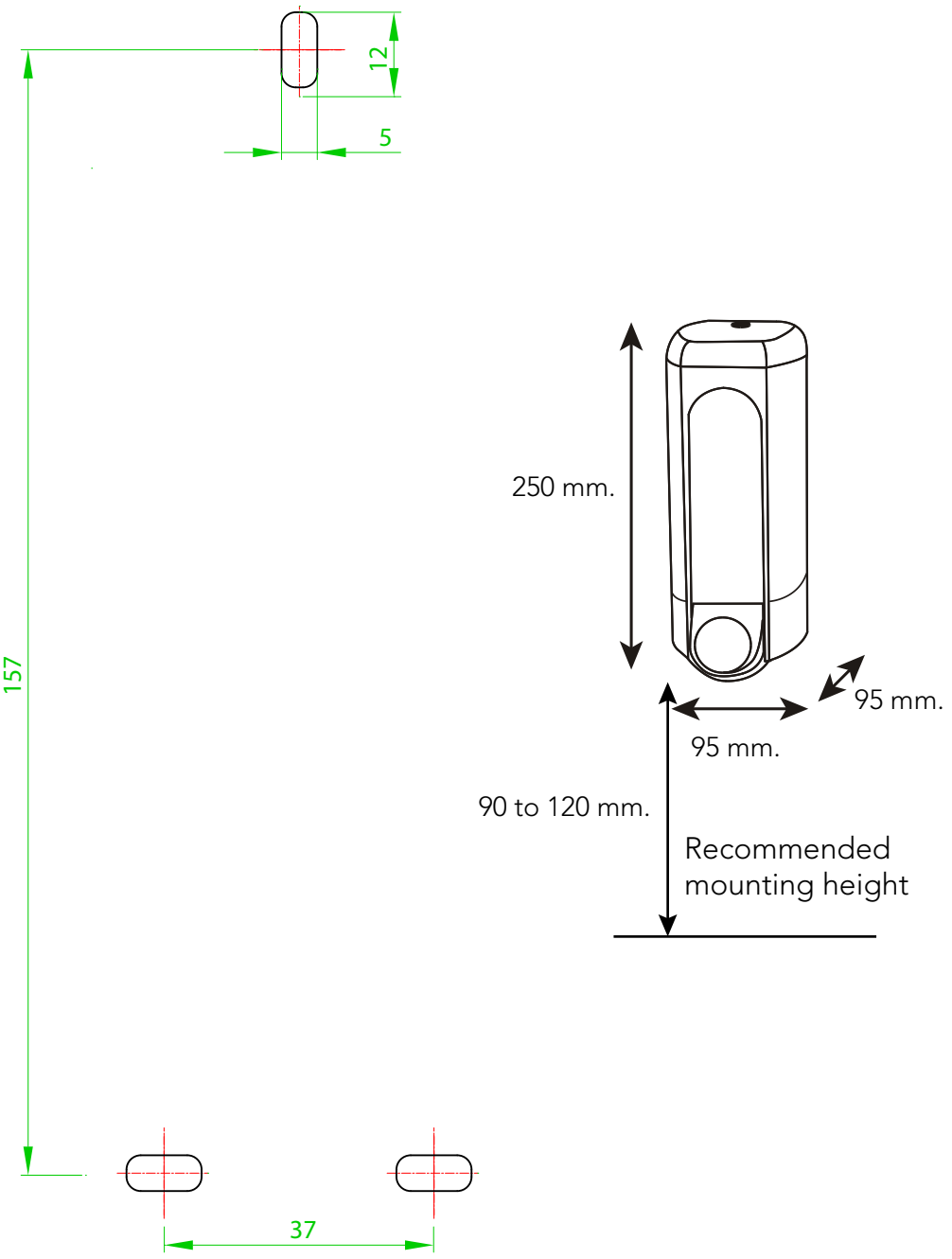
12
5
157
37
250 mm.
95 mm.
95 mm.
90 to 120 mm.
Recommended
mounting height