INSTALLATION INSTRUCTIONS

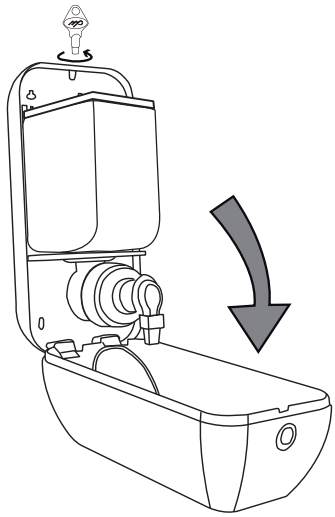

1. Open the dispenser with the key.
   Extract the container (a).

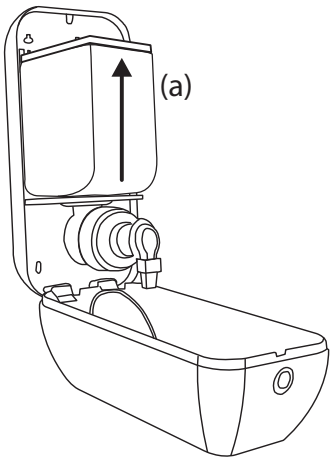

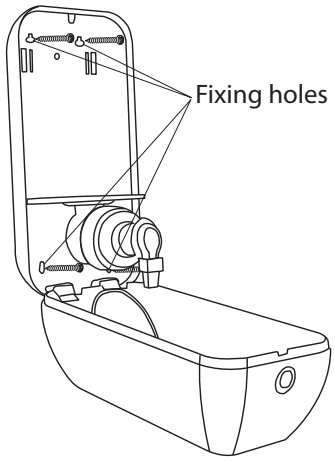

2. Fix the dispenser on the wall with the screws-kit,
   using the fixing holes.

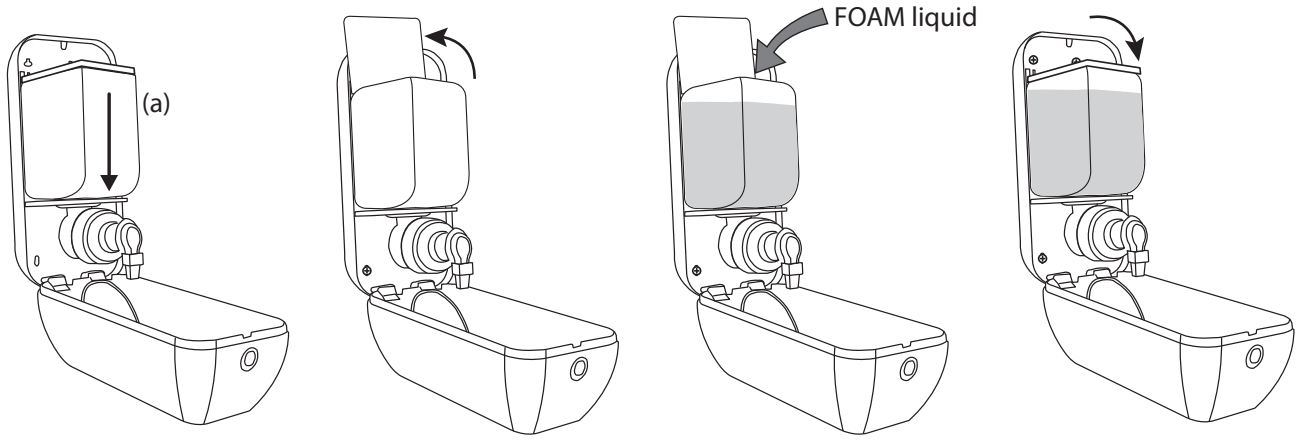

3. Insert the container, open the lid and refill it with the FOAM liquid. Close the lid.

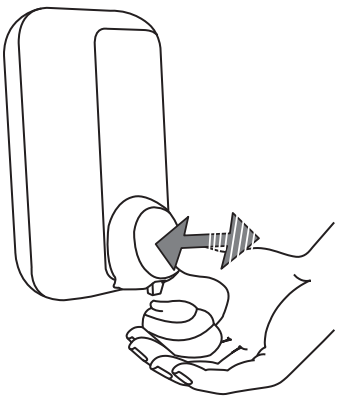

4. Close the dispenser.

IMPORTANT: wait about one minute, before pushing button, until the liquid soap refill the pump.