INSTRUCTIONS ART. 773/774

1

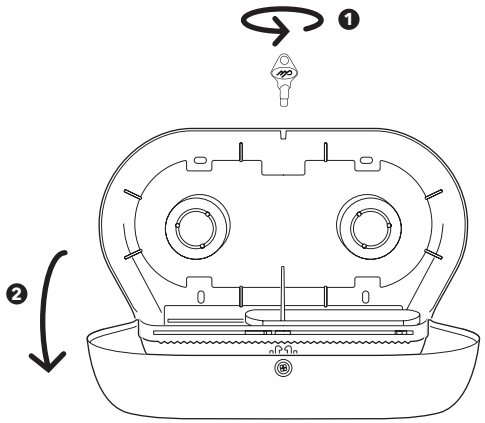

2

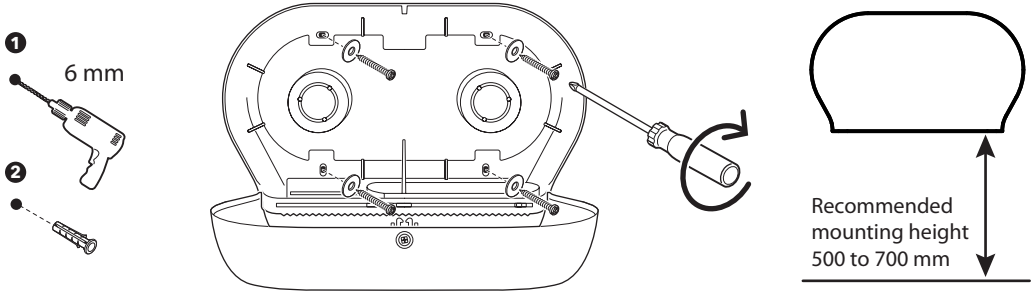

3 a

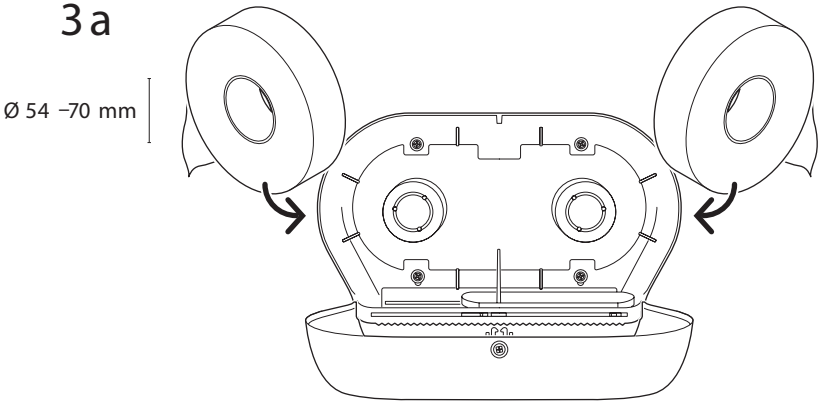

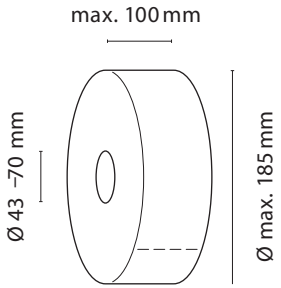

3 b

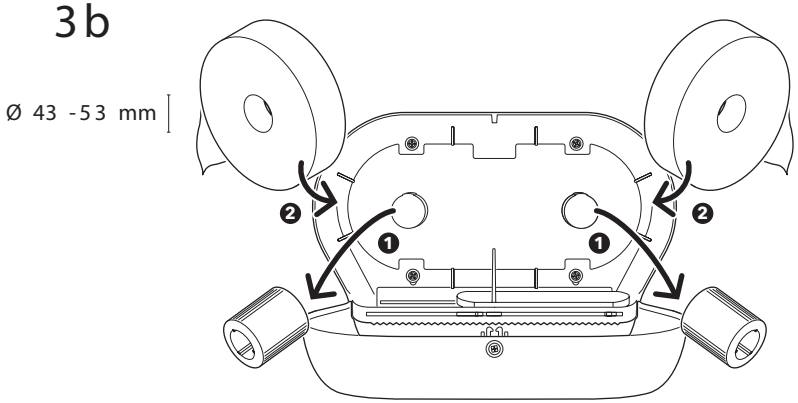

4

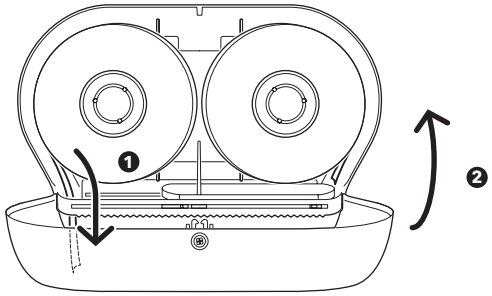

5

