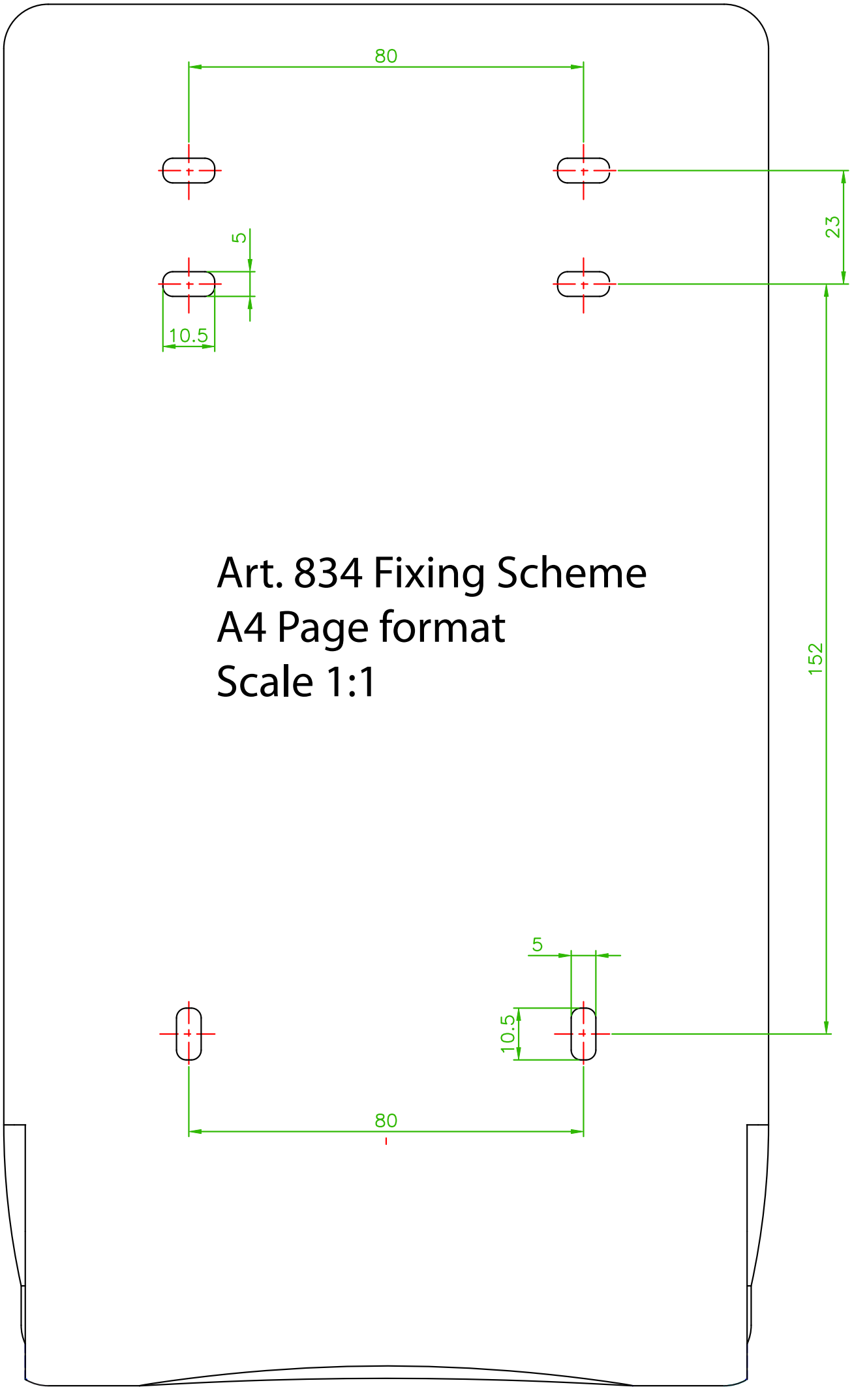
80
23
5
10.5
Art. 834 Fixing Scheme
A4 Page format
Scale 1:1
152
5
10.5
80