INSTRUCTIONS ART. 594/595

1

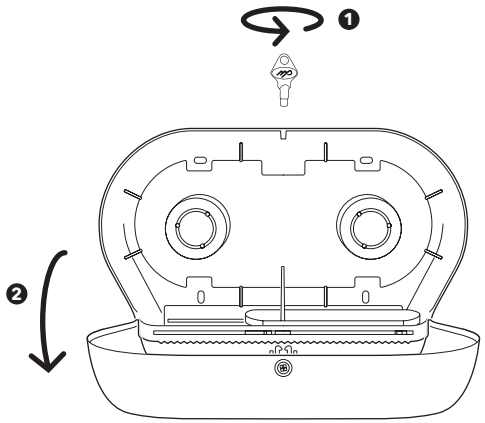

2

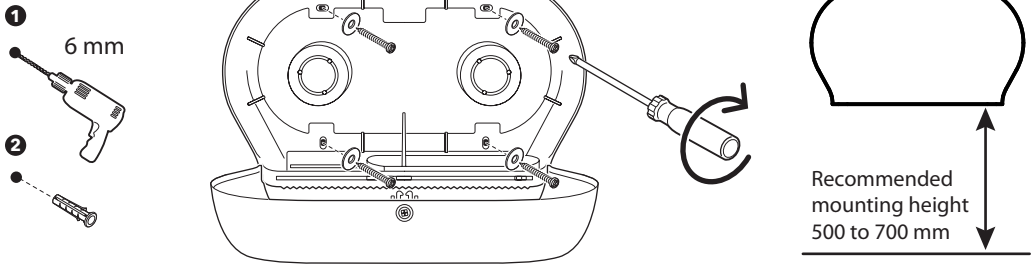

3 a

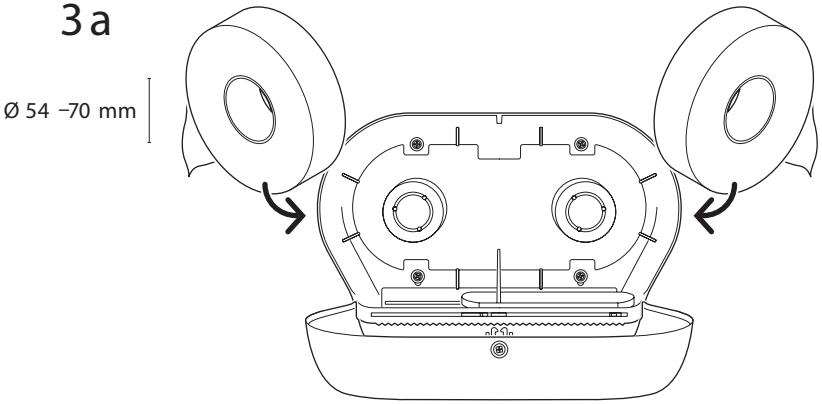

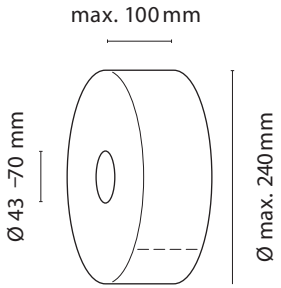

3 b

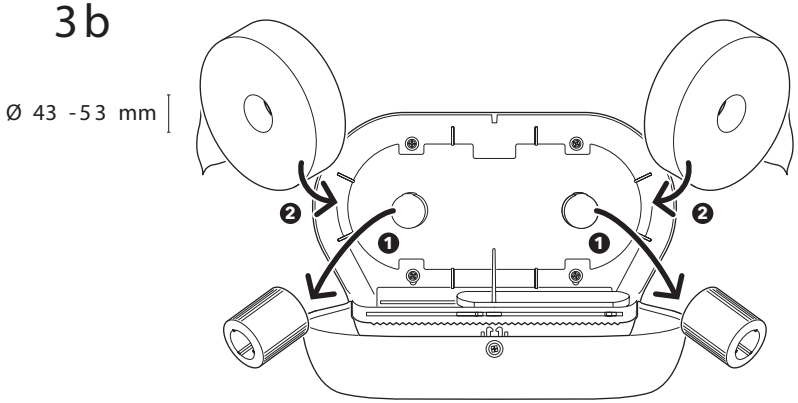

4

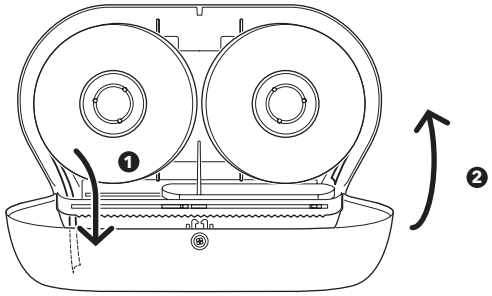

5

