ART. 756 INSTRUCTIONS

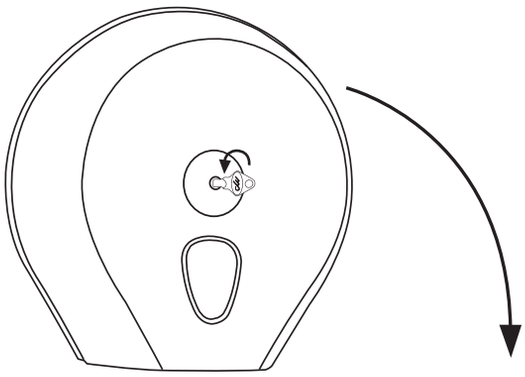

1) Open dispenser with the Key

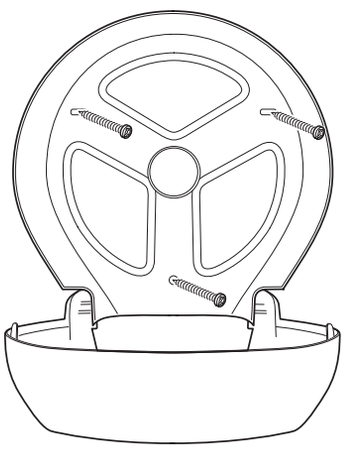

2) Fix dispenser on the wall with screws-kit

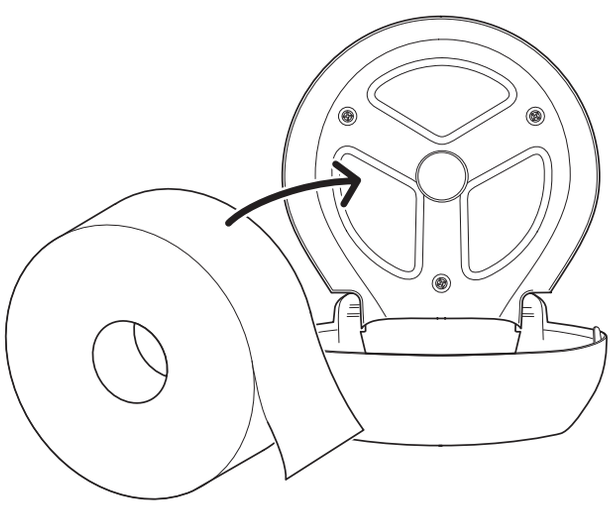

3) Insert the toilet roll.
If necessary use the core adaptor (a).

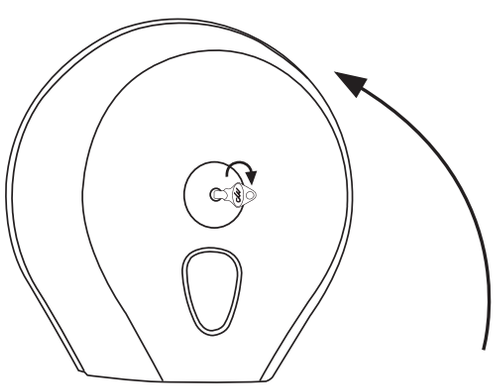

4) Close dispenser